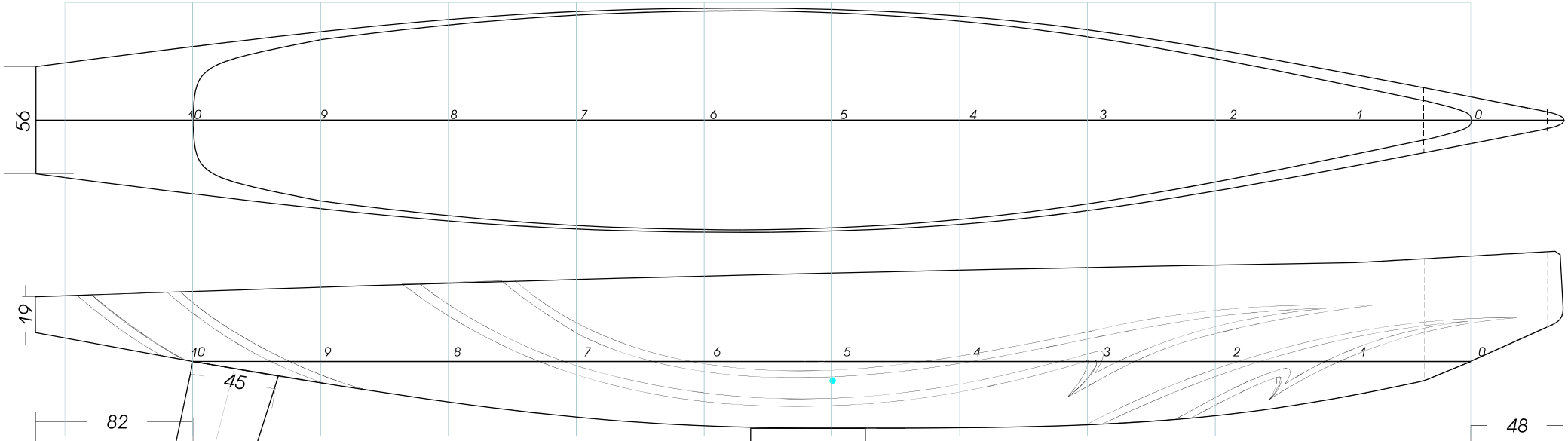


57.5 cm²
13.5 cm3

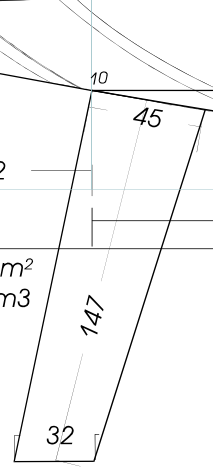


Weight budget

| | |
|---|---|
| Hull | 90 g |
| Deck | 35 g |
| Fin | 80 g |
| Rudder | 25 g |
| Rig | 110 g |
| Winch | 60 g |
| Servo | 20 g |
| Rx | 10 g |
| Batt. | 55 g |
| Reinfor. | 50 g |
| Paint | 25 g |
| Bulb | 800 g |
| Total | 1360 g |
| DSPL | 1423g |
| margin | 63 g |

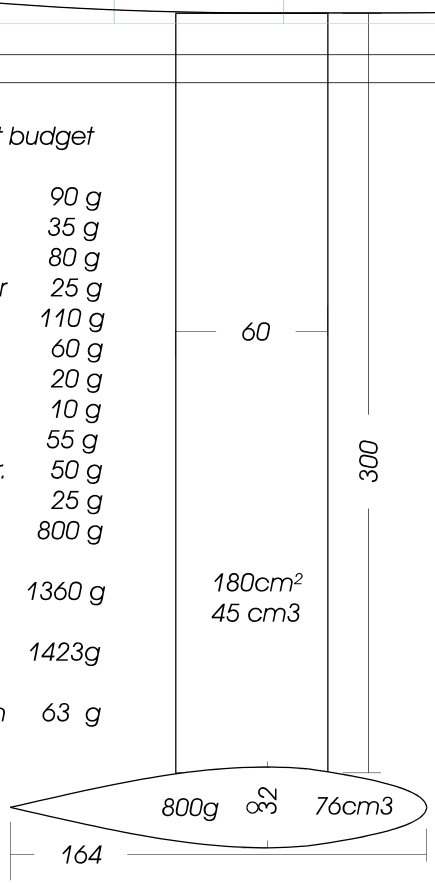


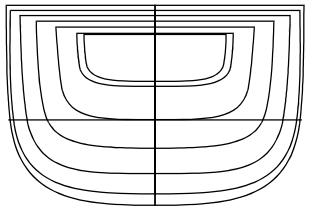

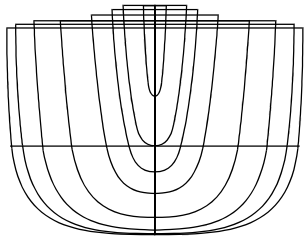

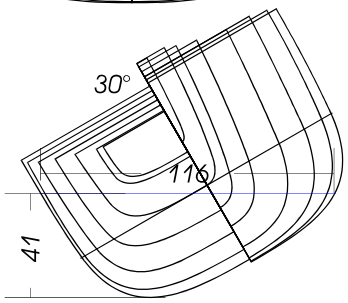


scale 1 : 1

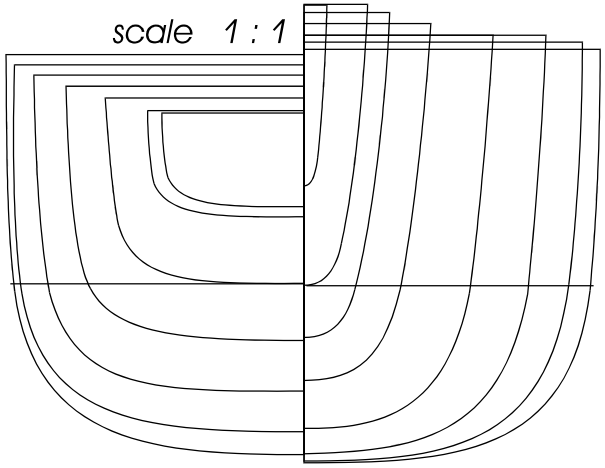

# AC130

| | |
|---|---|
| LOA | 800 mm |
| LWL | 670 mm |
| Beam | 118 mm |
| WBeam | 114 mm |
| Draft | 35 mm |
| WPlan | 550 cm² |
| DSPL | 1289 g |
| Appen. | 134 g |
| Tot. DSPL | 1423g |
| Bulb | 800 g |
| CB | -0% |
| PC | 0.58 |
| B/L | 0.170 |
| Lead | 8.3% LWL |
| Sail Plan | 35dm² |

sheet 2

by ClaudioD